Max Collection

General Specifications

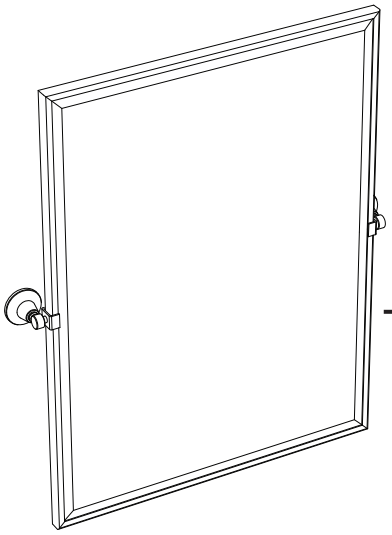

Pivoting Framed Large
Rectangle Mirror
(Beveled)

#4849FS (Chrome)
#4859FS (Satin Nickel)

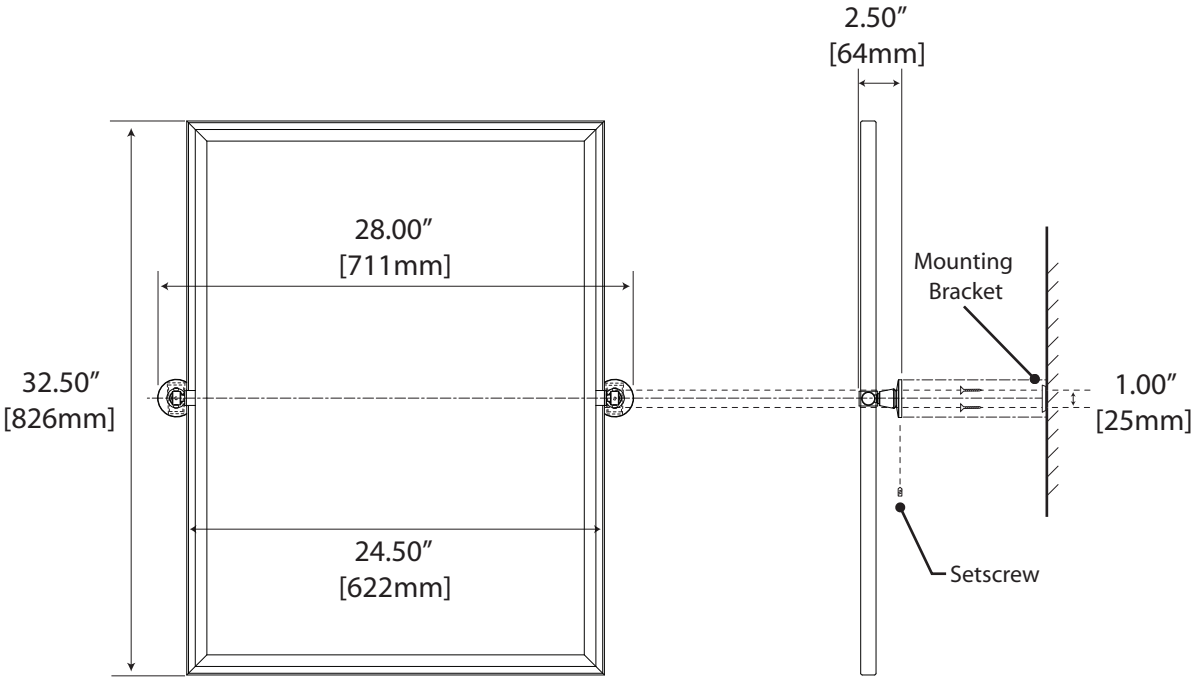

The manufacturer reserves the right to, and do time to time, make changes and improvements in designs and dimensions.
Updated on October 1, 2014